HSPAR5V

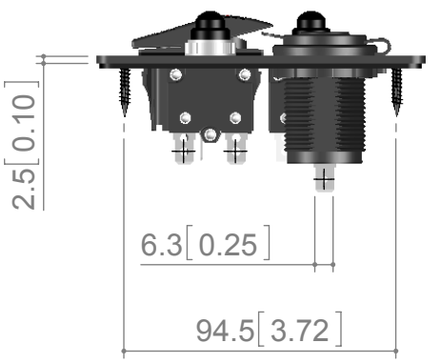
2.5[0.10]
6.3[0.25]
94.5[3.72]

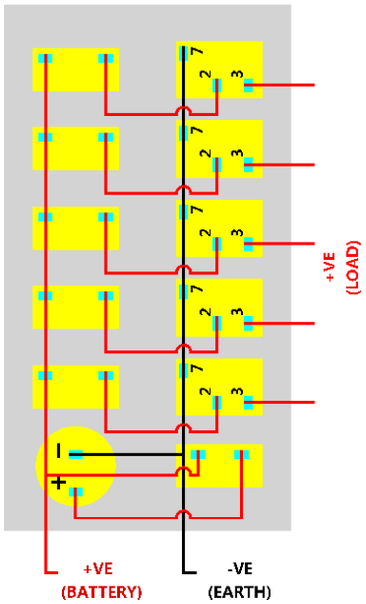
+VE
(LOAD)
+VE
(BATTERY)
-VE
(EARTH)

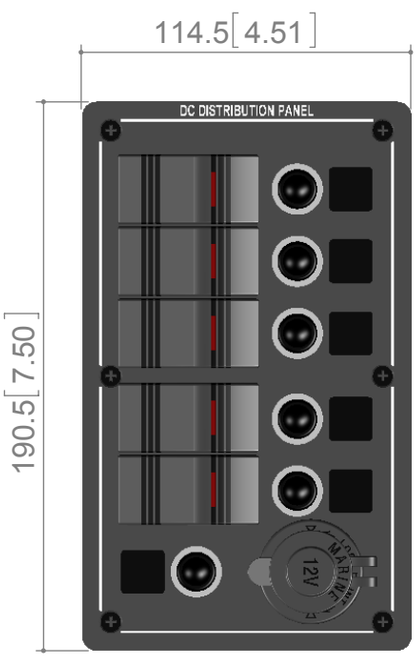
114.5[4.51]
190.5[7.50]
DC DISTRIBUTION PANEL

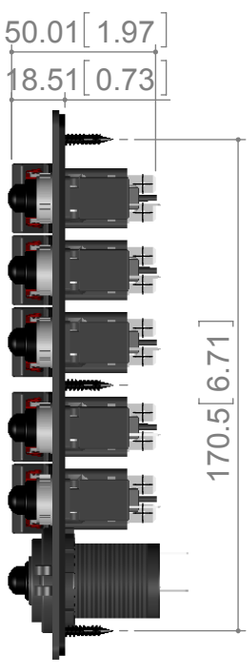
50.01[1.97]
18.51[0.73]
170.5[6.71]

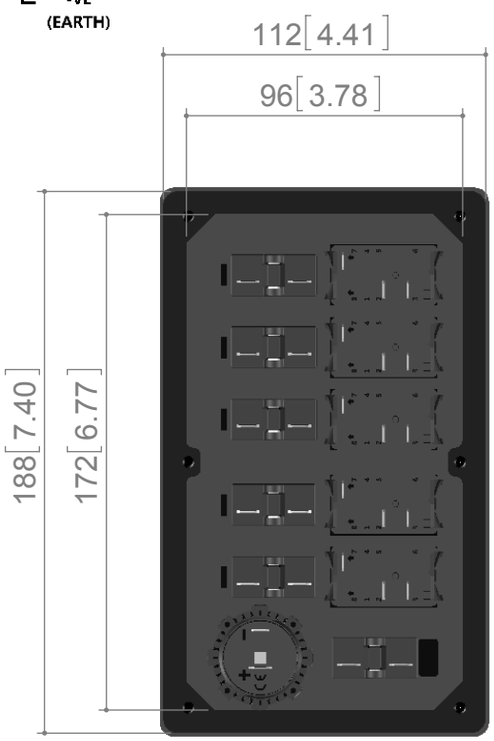
112[4.41]
96[3.78]
188[7.40]
172[6.77]

DC DISTRIBUTION PANEL