HSW12000-Q-12V
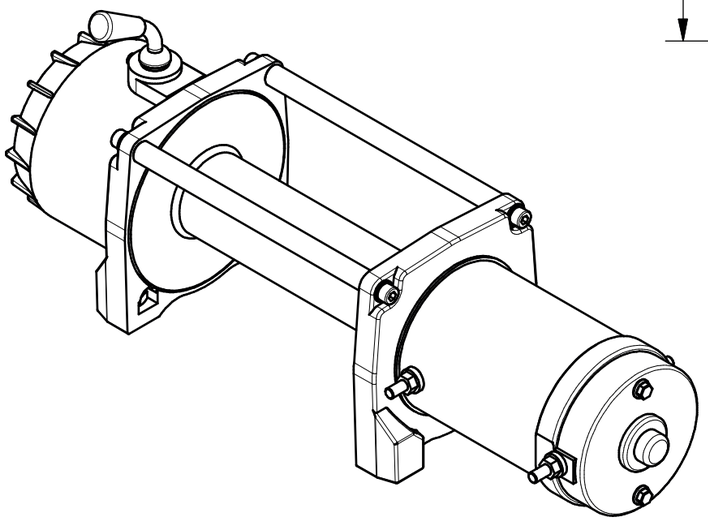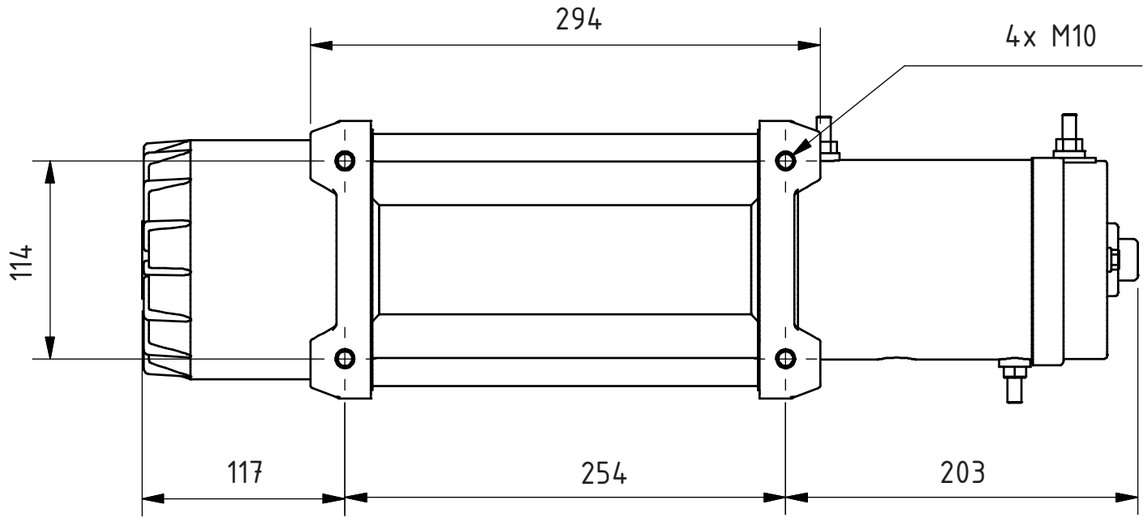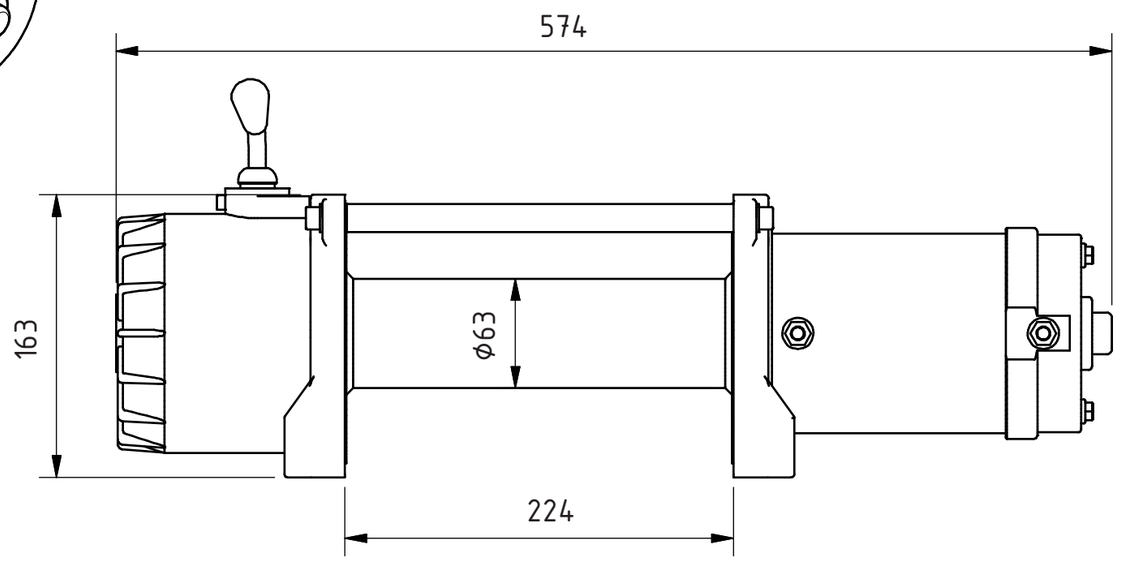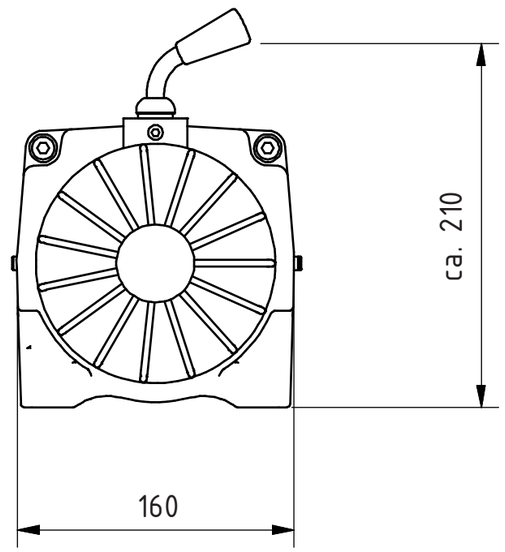
Seilwinde 5,4to Alpha 12.0 Quick 12V